# CLOUD

## Design by

**Outdoor,Lounge Collections**

Pz 1 | kg | m³ 0.32

## COD: CLO_SE3

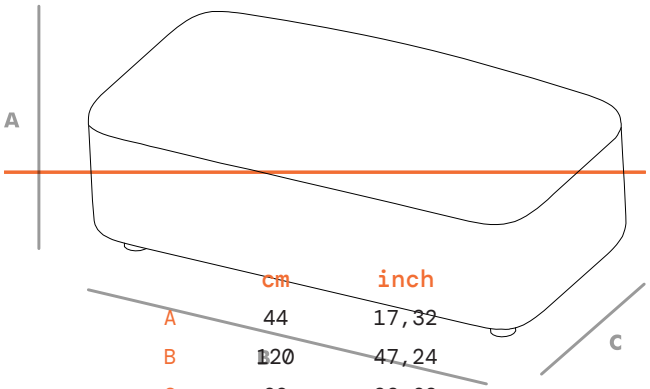


| | cm | inch |
|---|---|---|
| A | 44 | 17,32 |
| B | 120 | 47,24 |
| C | 60 | 23,62 |
| D | 44 | 17,32 |

## Description

Single module – pouffe
Seat composition module 120 × 60, H 44.

## Maintenance

CHROME PLATED PARTS: Clean with a soft cloth with some neutral detergent to polish the steel.

PLASTIC PARTS: Use soft cloth dampened slightly with water, without insistance, then dry with a dry cloth.

PAINTED PARTS: Clean with soft cloth dampened slightly with water and dry with a dry cloth.

ALUMINIUM PARTS: To clean use only specific products to polish metal parts in order to reduce the natural oxidation due to the hands contact. The aluminum parts tarnish naturally. Recommends not using chemical detergents.

FABRIC: For fabrics, spread a few drops of neutral detergent on a well-wrung damp cloth, wipe it gently over the seat and let it dry. Environmentally friendly products are strongly recommended.

LEATHER: Leather is a natural product. Imperfections on the leather give the material its unmistakable appearance. If there are stains, remove them with a soft woolen cloth. In case of more stubborn dirt, use only products for leather dyed with aniline dyes. Do not expose the leather to direct sunlight. The use of environmentally friendly products is strongly recommended.

WHEELERS/PEDESTALS: For the safety of the user and for different types of flooring, different types of casters are available as required by safety standards:
- hard casters for soft floor,
- soft casters for all hard floors (standard).